Global LCD Panel Exchange Center www.panelook.com 屏库:全球液晶屏交易中心

SPECIFICATION
FOR
APPROVAL

(●) **Preliminary Specification**
( ) **Final Specification**

Title	55.0" WUXGA TFT LCD

BUYER	LGE
MODEL	

SUPPLIER	**RAKEN Co., Ltd.**
*MODEL	LC550EUH
SUFFIX	**RDA2**

*When you obtain standard approval,
please use the above model name without suffix

APPROVED BY	**SIGNATURE DATE**
/	
/	
/	

Please return 1 copy for your confirmation with your signature and comments.

APPROVED BY	**SIGNATURE DATE**
Charlie.Ko/ Team Leader	
REVIEWED BY	
Power.Zheng/ Engineer	
PREPARED BY	
Suxi.Jiang/ Engineer	

TV R&D LCM Qualification Dept.
RAKEN Co., Ltd.

One step solution for LCD / PDP / OLED panel application: Datasheet, inventory and accessory! www.panelook.com

Global LCD Panel Exchange Center www.panelook.com 屏库:全球液晶屏交易中心

LCM ENGINEERING SPECIFICATION

*MODEL	LC550EUH
SUFFIX	RDA2
Update	Jul. 28. 2011

( ) **Preliminary Specification**

(●) **Final Specification**

APPROVED BY	SIGNATURE DATE
Peter. Kim / TV RD Leader	
Charlie. Ko / LCM Qualification Leader	
Herbert. Jung / EE Dept Leader	
Brainy. Jeong / ME Dept Leader	
Marco.Du / Power Dept Leader	

TV R&D Center. RAKEN Co., Ltd.

File No. :___LES-20110004_____

One step solution for LCD / PDP / OLED panel application: Datasheet, inventory and accessory! www.panelook.com

Global LCD Panel Exchange Center www.panelook.com 屏库:全球液晶屏交易中心

CONTENTS

Number	ITEM	Page
	COVER	1
	CONTENTS	2
	RECORD OF REVISIONS	3
1	GENERAL DESCRIPTION	4
2	ABSOLUTE MAXIMUM RATINGS	5
3	ELECTRICAL SPECIFICATIONS	6
3-1	ELECTRICAL CHARACTERISTICS	6
3-2	INTERFACE CONNECTIONS	8
3-3	SIGNAL TIMING SPECIFICATIONS	10
3-4	DATA MAPPING AND TIMING	11
3-5	Color Data Reference	14
3-6	POWER SEQUENCE	15
4	OPTICAL SPECIFICATIONS	17
5	MECHANICAL CHARACTERISTICS	21
6	RELIABILITY	26
7	INTERNATIONAL STANDARDS	27
7-1	ENVIRONMENT	27
8	PRECAUTIONS	28
8-1	MOUNTING PRECAUTIONS	28
8-2	OPERATING PRECAUTIONS	28
8-3	ELECTROSTATIC DISCHARGE CONTROL	29
8-4	PRECAUTIONS FOR STRONG LIGHT EXPOSURE	29
8-5	STORAGE	29
8-6	HANDLING PRECAUTIONS FOR PROTECTION FILM	29

One step solution for LCD / PDP / OLED panel application: Datasheet, inventory and accessory! www.panelook.com

Global LCD Panel Exchange Center www.panelook.com 屏库:全球液晶屏交易中心

RECORD OF REVISIONS

Revision No.	Revision Date	Page	Description
1.0	Jun 09, 2011	-	Final Specification

www.panelook.com

One step solution for LCD / PDP / OLED panel application: Datasheet, inventory and accessory! www.panelook.com

Global LCD Panel Exchange Center www.panelook.com 屏库:全球液晶屏交易中心

1. General Description

The LC550EUH is a Color Active Matrix Liquid Crystal Display with an integral Light Emitting Diode (LED) backlight system. The matrix employs a-Si Thin Film Transistor as the active element. It is a transmissive type display operating in the normally black mode. It has a 54.64 inch diagonally measured active display area with WUXGA resolution (1080 vertical by 1920 horizontal pixel array). Each pixel is divided into Red, Green and Blue sub-pixels or dots which are arranged in vertical stripes. Gray scale or the luminance of the sub-pixel color is determined with a 8-bit gray scale signal for each dot. Therefore, it can present a palette of more than 16.7M(true) colors.
It is intended to support LCD TV, PCTV where high brightness, super wide viewing angle, high color gamut, high color depth and fast response time are important.

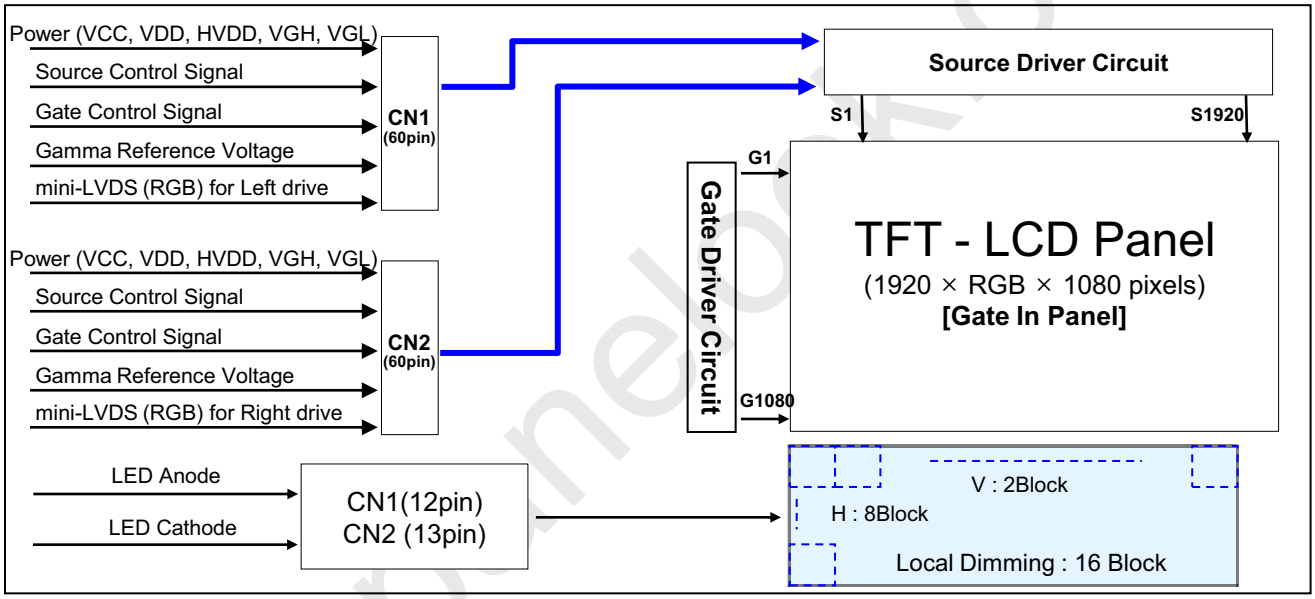

General Features

Active Screen Size	54.64 inches(1387.8mm) diagonal
Outline Dimension	1255.6(H) x 726.4.0 (V) x10.8 (D) (Typ.)
Pixel Pitch	0.630 mm x 0.630 mm
Pixel Format	1920 horiz. by 1080 vert. Pixels, RGB stripe arrangement
Color Depth	8-bit, 16.7 M colors (※ 1.06B colors @ 10 bit (D) System Output)
Drive IC Data Interface	Source D-IC : 8-bit mini-LVDS, and control signals TTL Gate D-IC : Line on Glass (LOG) Through Source D-IC
Luminance, White	400 cd/m2 (Center 1point ,Typ.)
Viewing Angle (CR>10)	Viewing angle free (R/L 178 (Min.), U/D 178 (Min.))
Power Consumption	Total 126.1W [Logic= 6.1W, B/L=120W (ExtVbr_B=100%)]
Weight	14.5Kg (Typ.)
Display Operating Mode	Transmissive mode, Normally black
Surface Treatment	Hard coating(3H), Anti-glare treatment of the front polarizer (Haze 10%)

One step solution for LCD / PDP / OLED panel application: Datasheet, inventory and accessory! www.panelook.com

Global LCD Panel Exchange Center www.panelook.com 屏库:全球液晶屏交易中心

2. Absolute Maximum Ratings

The following items are maximum values which, if exceeded, may cause faulty operation or permanent damage to the LCD module.

Table 1. ABSOLUTE MAXIMUM RATINGS

Parameter	Symbol	Value		Unit	Note
		Min	Max		
Logic Power Voltage	VCC	-0.5	+4.0	VDC	1
Gate High Voltage	VGH	+18.0	+30.0	VDC	
Gate Low Voltage	VGL	-8.0	-4.0	VDC	
Source D-IC Analog Voltage	VDD	-0.3	+18.0	VDC	
Gamma Ref. Voltage (Upper)	VGMH	½VDD-0.5	VDD+0.5	VDC	
Gamma Ref. Voltage (Low)	VGML	-0.3	½ VDD+0.5	VDC	
LED Input voltage (Forward voltage)	Vf	-	+100	VDC	
Panel Front Temperature	TSUR	-	+68	°C	4
Operating Temperature	TOP	0	+50	°C	2,3
Storage Temperature	TST	-20	+60	°C	
Operating Ambient Humidity	HOP	10	90	%RH	
Storage Humidity	HST	10	90	%RH	

Note1. Ambient temperature condition (Ta = 25 ± 2 °C)

2. Temperature and relative humidity range are shown in the figure below.
   Wet bulb temperature should be Max 39°C, and no condensation of water.
3. Gravity mura can be guaranteed below 40°C condition.
4. The maximum operating temperatures is based on the test condition that the surface temperature of display area is less than or equal to 68°C with LCD module alone in a temperature controlled chamber. Thermal management should be considered in final product design to prevent the surface temperature of display area from being over 68℃. The range of operating temperature may be degraded in case of improper thermal management in final product design.

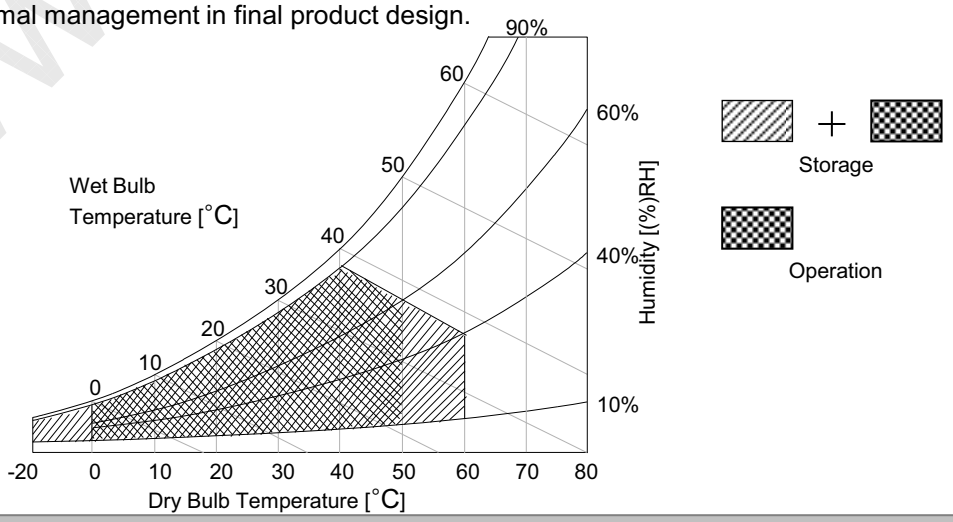

One step solution for LCD / PDP / OLED panel application: Datasheet, inventory and accessory! www.panelook.com

Global LCD Panel Exchange Center www.panelook.com 屏库:全球液晶屏交易中心

3. Electrical Specifications

3-1. Electrical Characteristics

It requires several power inputs. The VCC is the basic power of LCD Driving power sequence, Which is used to logic power voltage of Source D-IC and Gate D-IC.

Table 2. ELECTRICAL CHARACTERISTICS

Parameter	Symbol	Condition	MIN	TYP	MAX	Unit	Note
Logic Power Voltage	VCC	-	3.0	3.3	3.6	VDC	
Logic High Level Input Voltage	VIH	-	2.7	-	VCC	VDC	
Logic Low Level Input Voltage	VIL	-	0	-	0.6	VDC	
Source D-IC Analog Voltage	VDD	-	16.0	16.2	16.4	VDC	
Half Source D-IC Analog Voltage	H_VDD	-	7.75	7.9	8.25	VDC	7
Gamma Reference Voltage	V_{GMH}	(GMA1 ~ GMA9)	½*VDD	-	VDD-0.2	VDC	
	V_{GML}	(GMA10 ~ GMA18)	0.2	-	½*VDD	VDC	
Common Voltage	Vcom	Normal	6.78	7.08	7.38	V	
		Reverse	6.78	7.08	7.38	V	
Mini-LVDS Clock frequency	CLK	3.0V≤VCC ≤3.6V		-	312	MHz	
mini-LVDS input Voltage (Center)	VIB	Mini-LVDS Clock and Data	0.7 + (VID/2)	-	(VCC-1.2) − VID / 2	V	5
mini-LVDS input Voltage Distortion (Center)	ΔVIB		-	-	0.8	V	
mini-LVDS differential Voltage range	VID		200	-	800	mV	
mini-LVDS differential Voltage range Dip	ΔVID		25	-	800	mV	
Gate High Voltage	VGH	@ 25℃	27.7	28.0	28.3	VDC	
		@ 0℃	27.7	28.0	28.3	VDC	
Gate Low Voltage	VGL	-	-5.5	-5.3	-5.1	VDC	
GIP Bi-Scan Voltage	VGI_P VGI_N	-	VGL	-	VGH	VDC	
GIP Refresh Voltage	VGH even/odd	-	VGL	-	VGH	V	
GIP Start Pulse Voltage	VST	-	VGL	-	VGH	V	
GIP Operating Clock	GCLK	-	VGL	-	VGH	V	
Total Power Current	ILCD	-		510	663	mA	1
Total Power Consumption	PLCD	-		6.1	7.9	Watt	1

Note:
1. The specified current and power consumption are under the VLCD=12V., 25 ± 2°C, f_V=120Hz condition whereas mosaic pattern(8 x 6) is displayed and f_V is the frame frequency.
2. The above spec is based on the basic model.
3. All of the typical gate voltage should be controlled within 1% voltage level
4. Ripple voltage level is recommended under 10%
5. In case of mini-LVDS signal spec, refer to Fig 2 for the more detail.
6. Logic Level Input Signal : SOE,POL,GSP,H_CONV,OPT_N
7. HVDD Voltage level is half of VDD and it should be between Gamma9 and Gamma10.

One step solution for LCD / PDP / OLED panel application: Datasheet, inventory and accessory! www.panelook.com

Global LCD Panel Exchange Center www.panelook.com 屏库:全球液晶屏交易中心

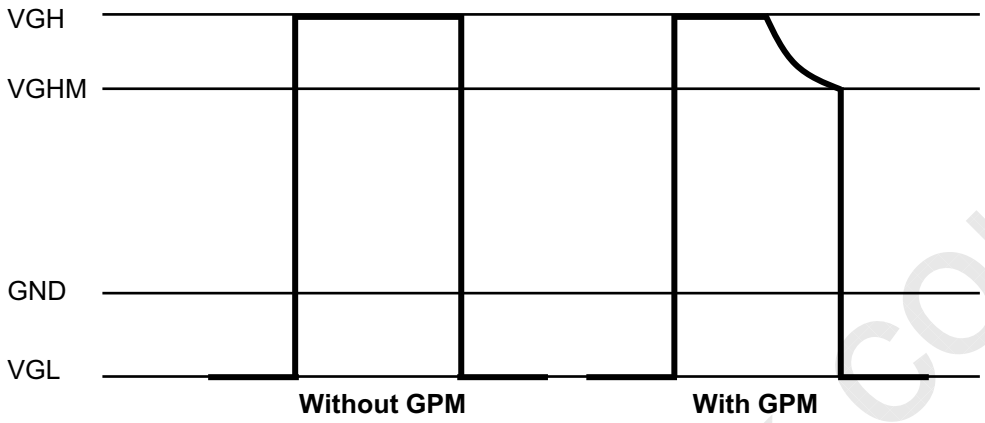

FIG. 1 Gate Output Wave form without GPM and with GPM

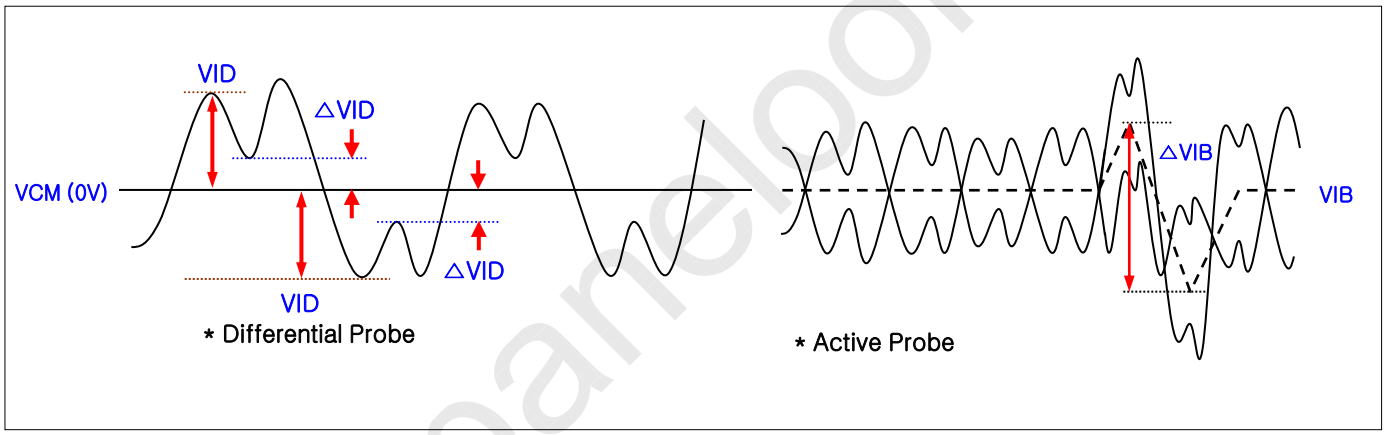

FIG. 2 Description of VID, ΔVIB, ΔVID

* Source PCB

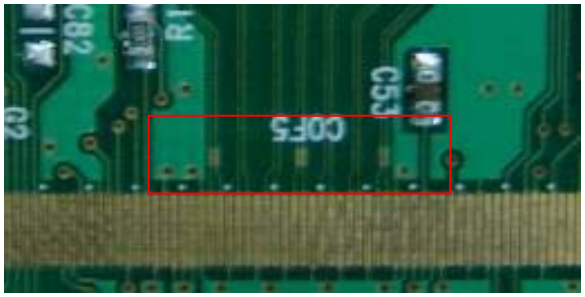

FIG. 3 Measure point

One step solution for LCD / PDP / OLED panel application: Datasheet, inventory and accessory! www.panelook.com

Global LCD Panel Exchange Center www.panelook.com 屏库:全球液晶屏交易中心

Table 3. ELECTRICAL CHARACTERISTICS (Continue)

Parameter		Symbol	Values			Unit	Note
			Min	Typ	Max		
Backlight Assembly :							
Forward Current (one array)	Anode	$I_{F\ (anode)}$		800		mAdc	±5%
	Cathode	$I_{F\ (cathode)}$	95	100	105	mAdc	2, 3
Forward Voltage		V_F	58	64	70	Vdc	4
Forward Voltage Variation		$\triangle V_F$			1.7	Vdc	5
Power Consumption		P_{BL}	-	120	132	W	6
Burst Dimming Duty		On duty	1		100	%	
Burst Dimming Frequency		1/T	95		182	Hz	8
LED Array : (APPENDIX-V)							
Life Time			30,000	50,000		Hrs	7

Note : The design of the LED driver must have specifications for the LED array in LCD Assembly.
The electrical characteristics of LED driver are based on Constant Current driving type.
The performance of the LED in LCM, for example life time or brightness, is extremely influenced by the characteristics of the LED Driver. So, all the parameters of an LED driver should be carefully designed.
When you design or order the LED driver, please make sure unwanted lighting caused by the mismatch of the LED and the driver (no lighting, flicker, etc) has never been occurred. When you confirm it, the LCD–Assembly should be operated in the same condition as installed in your instrument.

1. Electrical characteristics are based on LED Array specification.
2. Specified values are defined for a Backlight Assembly. (IBL : 2 LED array, 100mA/LED array)
3. Each LED array has two anode terminal and four cathode terminals.
   The forward current(I_F) of the anode terminal is 400mA and it supplies 100mA into 4 strings, respectively

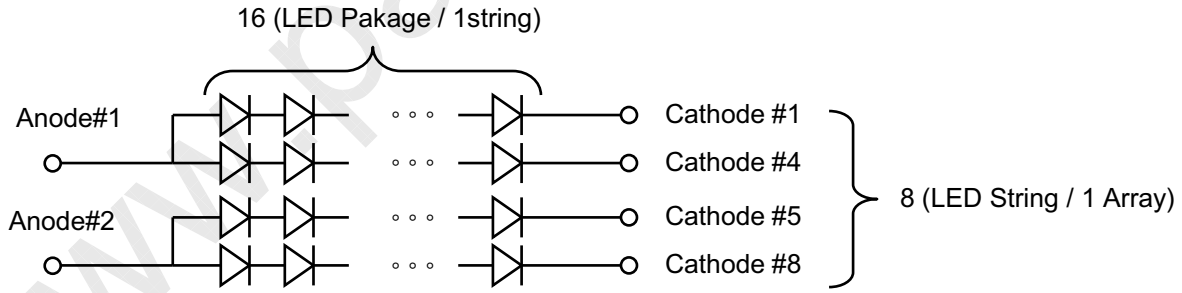

4. The forward voltage(V_F) of LED array depends on ambient temperature (Appendix-V)
5. ΔV_F means Max V_F-Min V_F in one Backlight. So V_F variation in a Backlight isn't over Max. 1.7V
6. Maximum level of power consumption is measured at initial turn on.
   Typical level of power consumption is measured after 1hrs aging at 25 ± 2°C.
7. The life time(MTTF) is determined as the time at which brightness of the LED is 50% compared to that of initial value at the typical LED current on condition of continuous operating at 25 ± 2°C, based on duty 100%.
8. The reference method of burst dimming duty ratio.
   It is recommended to use synchronous V-sync frequency to prevent waterfall
   (Vsync x 1 =Burst Frequency)
   Though PWM frequency is over 182Hz (max252Hz), function of backlight is not affected.

One step solution for LCD / PDP / OLED panel application: Datasheet, inventory and accessory! www.panelook.com

Global LCD Panel Exchange Center www.panelook.com 屏库:全球液晶屏交易中心

3-2. Interface Connections

This LCD module employs two kinds of interface connection, two 60-pin FFC connector are used for the module electronics.

3-2-1. LCD Module

-LCD Connector (CN1): TF06L-60S-0.5SH (Manufactured by HRS)

Table 3-1. MODULE CONNECTOR(CN1) PIN CONFIGURATION

No	Symbol	Description	No	Symbol	Description
1	LTD_OUT	LTD OUTPUT	31	LLV4 +	Left Mini LVDS Receiver Signal(4+)
2	NC	No Connection	32	LLV3 -	Left Mini LVDS Receiver Signal(3-)
3	GND	Ground	33	LLV3 +	Left Mini LVDS Receiver Signal(3+)
4	NC	No Connection	34	LCLK -	Left Mini LVDS Receiver Clock Signal(-)
5	GND	Ground	35	LCLK +	Left Mini LVDS Receiver Clock Signal(+)
6	GSC	GATE Shift Clock	36	LLV2 -	Left Mini LVDS Receiver Signal(2-)
7	GOE	GATE Output Enable	37	LLV2 +	Left Mini LVDS Receiver Signal(2+)
8	GND	Ground	38	LLV1 -	Left Mini LVDS Receiver Signal(1-)
9	VGH	GATE High Voltage	39	LLV1 +	Left Mini LVDS Receiver Signal(1+)
10	VGH	GATE High Voltage	40	LLV0 -	Left Mini LVDS Receiver Signal(0-)
11	GND	Ground	41	LLV0 +	Left Mini LVDS Receiver Signal(0+)
12	GND	Ground	42	GND	Ground
13	VGL	GATE Low Voltage	43	SOE	Source Output Enable SIGNAL
14	VGL	GATE Low Voltage	44	POL	Polarity Control Signal
15	GND	Ground	45	GSP	GATE Start Pulse
16	VCOM_L_FB	VCOM Left Feed-Back Output	46	H_CONV	"H" H 2dot Inversion/ "L" H 1dot Inversion
17	VCOM_L	VCOM Left Input	47	OPT_N	"H" Normal Display
18	GND	Ground	48	GND	Ground
19	GND	Ground	49	GMA 18	GAMMA VOLTAGE 18 (Output from LCD)
20	VDD	Driver Power Supply Voltage	50	GMA 16	GAMMA VOLTAGE 16
21	VDD	Driver Power Supply Voltage	51	GMA 15	GAMMA VOLTAGE 15
22	H_VDD	Half Driver Power Supply Voltage	52	GMA 14	GAMMA VOLTAGE 14
23	H_VDD	Half Driver Power Supply Voltage	53	GMA 12	GAMMA VOLTAGE 12
24	GND	Ground	54	GMA 10	GAMMA VOLTAGE 10 (Output from LCD)
25	VCC	Logic Power Supply Voltage	55	GMA 9	GAMMA VOLTAGE 9 (Output from LCD)
26	VCC	Logic Power Supply Voltage	56	GMA 7	GAMMA VOLTAGE 7
27	GND	Ground	57	GMA 5	GAMMA VOLTAGE 5
28	LLV5 -	Left Mini LVDS Receiver Signal(5-)	58	GMA 4	GAMMA VOLTAGE 4
29	LLV5 +	Left Mini LVDS Receiver Signal(5+)	59	GMA 3	GAMMA VOLTAGE 3
30	LLV4 -	Left Mini LVDS Receiver Signal(4-)	60	GMA 1	GAMMA VOLTAGE 1 (Output from LCD)

Note :
1. Please refer to application note for details.
   (**Half VDD & Gamma Voltage & H_CONV setting**)
2. These 'input signal' (OPT_N,H_CONV) should be connected

One step solution for LCD / PDP / OLED panel application: Datasheet, inventory and accessory! www.panelook.com

Global LCD Panel Exchange Center www.panelook.com 屏库:全球液晶屏交易中心

-LCD Connector (CN2): TF06L-60S-0.5SH(Manufactured by HRS)

Table 3-2. MODULE CONNECTOR(CN2) PIN CONFIGURATION

No	Symbol	Description		No	Symbol	Description
1	GMA 1	GAMMA VOLTAGE 1 (Output from LCD)		31	RLV1 +	Right Mini LVDS Receiver Signal(1+)
2	GMA 3	GAMMA VOLTAGE 3		32	RLV0 -	Right Mini LVDS Receiver Signal(0-)
3	GMA 4	GAMMA VOLTAGE 4		33	RLV0 +	Right Mini LVDS Receiver Signal(0+)
4	GMA 5	GAMMA VOLTAGE 5		34	GND	Ground
5	GMA 7	GAMMA VOLTAGE 7		35	VCC	Logic Power Supply Voltage
6	GMA 9	GAMMA VOLTAGE 9 (Output from LCD)		36	VCC	Logic Power Supply Voltage
7	GMA 10	GAMMA VOLTAGE 10 (Output from LCD)		37	GND	Ground
8	GMA 12	GAMMA VOLTAGE 12		38	H_VDD	Half Driver Power Supply Voltage
9	GMA 14	GAMMA VOLTAGE 14		39	H_VDD	Half Driver Power Supply Voltage
10	GMA 15	GAMMA VOLTAGE 15		40	VDD	Driver Power Supply Voltage
11	GMA 16	GAMMA VOLTAGE 16		41	VDD	Driver Power Supply Voltage
12	GMA 18	GAMMA VOLTAGE 18 (Output from LCD)		42	GND	Ground
13	GND	Ground		43	GND	Ground
14	OPT_N	“H” Normal Display		44	VCOM_R	VCOM Right Input
15	H_CONV	"H“ H 2dot Inversion/ "L" H 1dot Inversion		45	VCOM_R_FB	VCOM Right Feed-Back Output
16	GSP	GATE Start Pulse		46	GND	Ground
17	POL	Polarity Control Signal		47	VGL	GATE Low Voltage
18	SOE	Source Output Enable SIGNAL		48	VGL	GATE Low Voltage
19	GND	Ground		49	GND	Ground
20	RLV5 -	Right Mini LVDS Receiver Signal(5-)		50	GND	Ground
21	RLV5 +	Right Mini LVDS Receiver Signal(5+)		51	VGH	GATE High Voltage
22	RLV4 -	Right Mini LVDS Receiver Signal(4-)		52	VGH	GATE High Voltage
23	RLV4 +	Right Mini LVDS Receiver Signal(4+)		53	GND	Ground
24	RLV3 -	Right Mini LVDS Receiver Signal(3-)		54	GOE	GATE Output Enable
25	RLV3 +	Right Mini LVDS Receiver Signal(3+)		55	GSC	GATE Shift Clock
26	LCLK -	Right Mini LVDS Receiver Clock Signal(-)		56	GND	Ground
27	LCLK +	Right Mini LVDS Receiver Clock Signal(+)		57	OPT_P	“L” Normal Display
28	RLV2 -	Right Mini LVDS Receiver Signal(2-)		58	GND	Ground
29	RLV2 +	Right Mini LVDS Receiver Signal(2+)		59	NC	No Connection
30	RLV1 -	Right Mini LVDS Receiver Signal(1-)		60	LTD_OUT	LTD OUTPUT

Note :
1. Please refer to application note for details
(**Half VDD & Gamma Voltage & H_CONV setting**)
2. These 'input signal' (OPT_N,H_CONV) should be connected

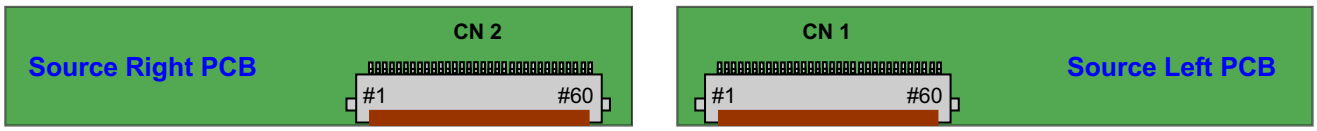

One step solution for LCD / PDP / OLED panel application: Datasheet, inventory and accessory! www.panelook.com

Global LCD Panel Exchange Center www.panelook.com 屏库:全球液晶屏交易中心

3-2-2. Backlight Module

Master

- LED Driver Connector : 20022WR - H14B1 (Yeonho) or Equivalent

- Mating Connector : 20022HS - 14B2 or Equivalent

Table 5. BACKLIGHT CONNECTOR PIN CONFIGURATION(CN201,CN202)

No	Symbol	Description	Note
1	Anode_L1 (1~4Cathode)	LED Input Current	
2	N.C	Open	
3	L1 Cathode	LED Output Current	
4	L2 Cathode	LED Output Current	
5	L3 Cathode	LED Output Current	
6	L4 Cathode	LED Output Current	
7	N.C	Open	
8	L5 Cathode	LED Output Current	
9	L6 Cathode	LED Output Current	
10	L7 Cathode	LED Output Current	
11	L8 Cathode	LED Output Current	
12	N.C	Open	
13	Anode_L2 (5~8Cathode)	LED Input Current	

No	Symbol	Description	Note
1	Anode_R2 (5~8Cathode)	LED Input Current	
2	N.C	Open	
3	R8Cathode	LED Output Current	
4	R7 Cathode	LED Output Current	
5	R6 Cathode	LED Output Current	
6	R5 Cathode	LED Output Current	
7	R4 Cathode	LED Output Current	
8	R3 Cathode	LED Output Current	
9	R2 Cathode	LED Output Current	
10	R1 Cathode	LED Output Current	
11	N.C	Open	
12	Anode_R1 (1~4Cathode)	LED Input Current	

◆ Rear view of LCM

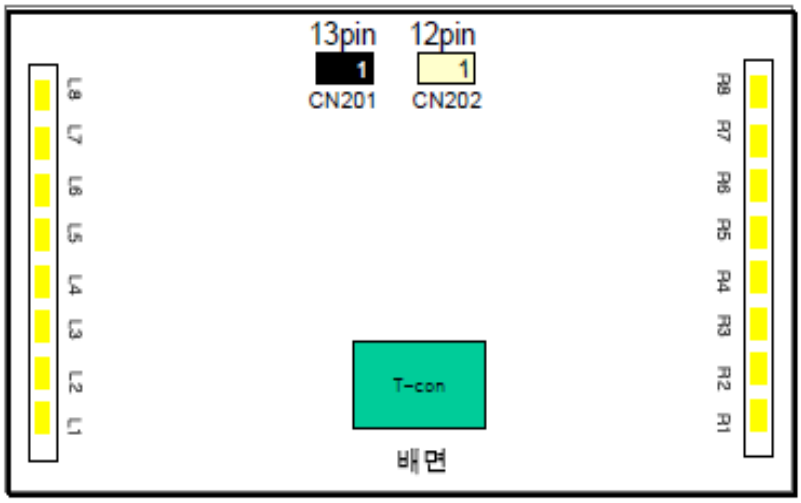

One step solution for LCD / PDP / OLED panel application: Datasheet, inventory and accessory! www.panelook.com

Global LCD Panel Exchange Center www.panelook.com 屏库:全球液晶屏交易中心

3-3. Signal Timing Specifications

Table 4. Timing Requirements

Parameter	Symbol	Condition	Min	Typ	Max	Unit	Note
Mini Clock pulse period	T_1		3.2	3.4		ns	1
Mini Clock pulse low period	T_2		1.6	-	-	ns	
Mini Clock pulse high period	T_3		1.6	-	-	ns	
Mini Data setup time	T_6		0.55	-	-	ns	
Mini Data hold time	T_7		0.55	-	-	ns	
Reset low to SOE rising time	T_8		0	-	-	ns	
SOE to Reset input time	T_9		200	-	-	ns	
Receiver off to SOE timing	T_{10}		10	-	-	CLK cycle	
POL signal to SOE setup time	T_{11}		-5	-	-	ns	
POL signal to SOE hold time	T_{12}		6	-	-	ns	
Reset High Period	T_{13}		3			CLK cycle	
SOE signal GSP setup time	T_{14}		100			ns	
SOE signal GSP Hold time	T_{15}		100			ns	
SOE signal Pulse Width	T_{16}		200			ns	

Note : 1. Mini-LVDS timing measure conditions
: 268MHz < Clock Frequency < 312MHz , 200mV < VID < 800mV @ 3.0<VCC<3.3
2. Setup time and hold time couldn't be satisfied at the same time

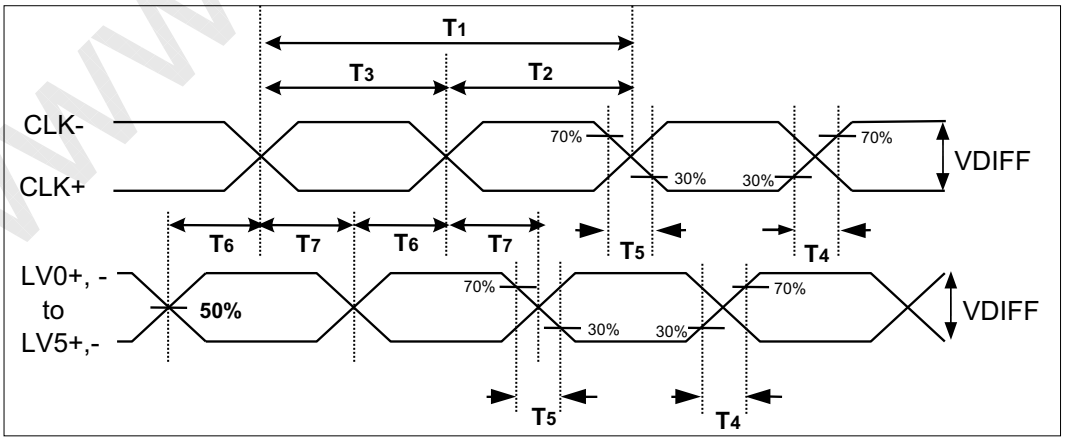

FIG 4. Source D-IC Input Data Latch Timing Waveform

One step solution for LCD / PDP / OLED panel application: Datasheet, inventory and accessory! www.panelook.com

Global LCD Panel Exchange Center www.panelook.com 屏库:全球液晶屏交易中心

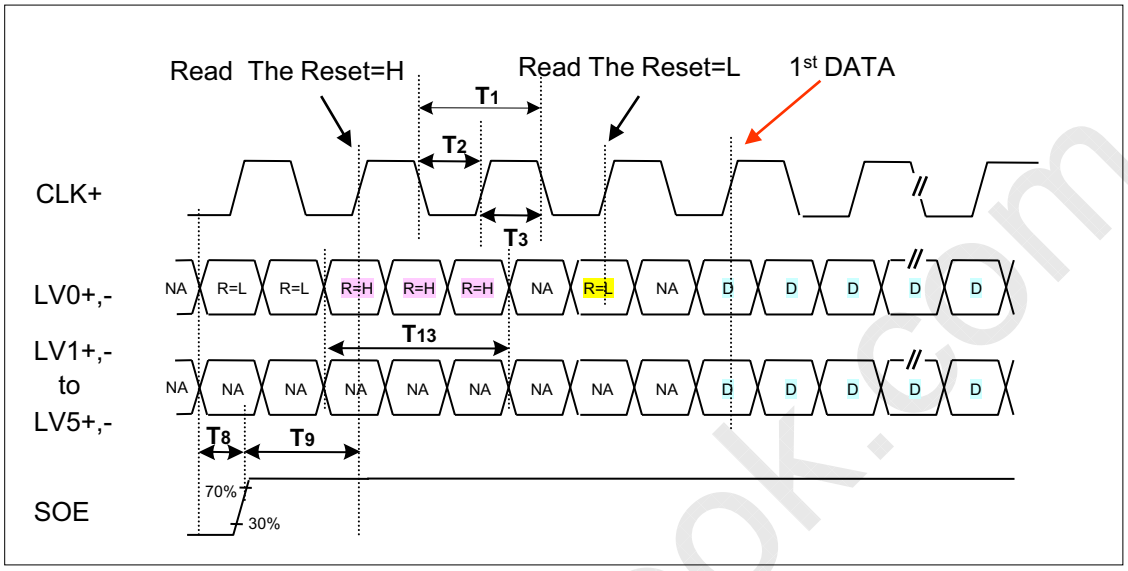

FIG 5-1. Input Data Timing for 1st Source D-IC Chip

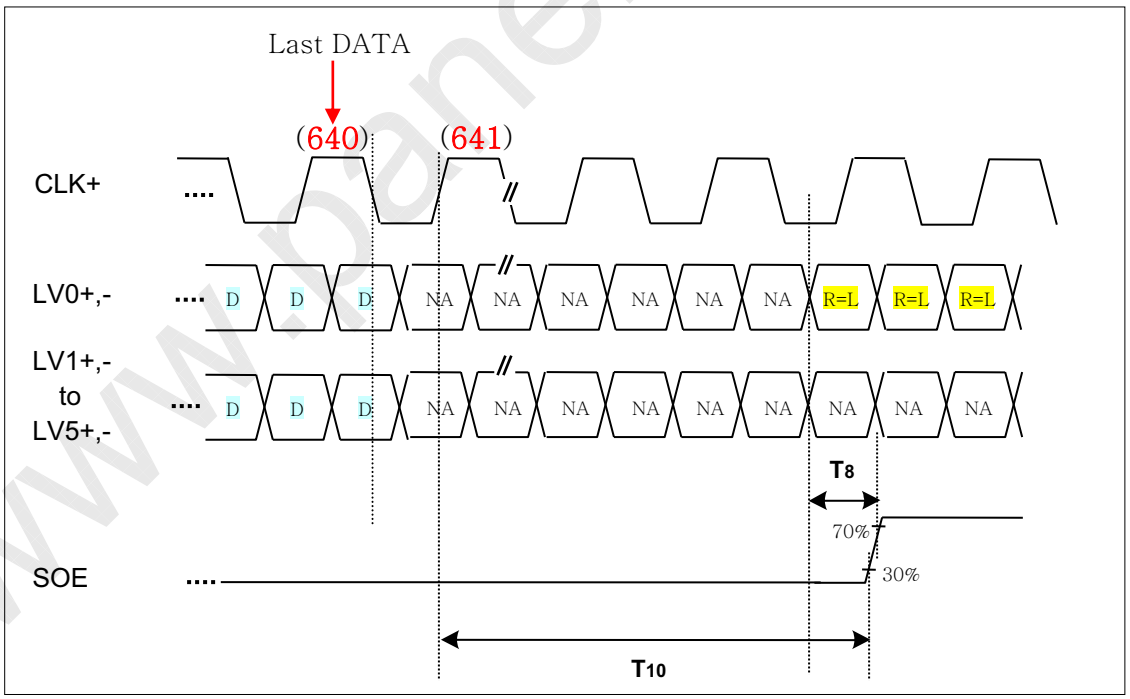

FIG 5-2. Last Data Latch to SOE Timing

One step solution for LCD / PDP / OLED panel application: Datasheet, inventory and accessory! www.panelook.com

Global LCD Panel Exchange Center www.panelook.com 屏库:全球液晶屏交易中心

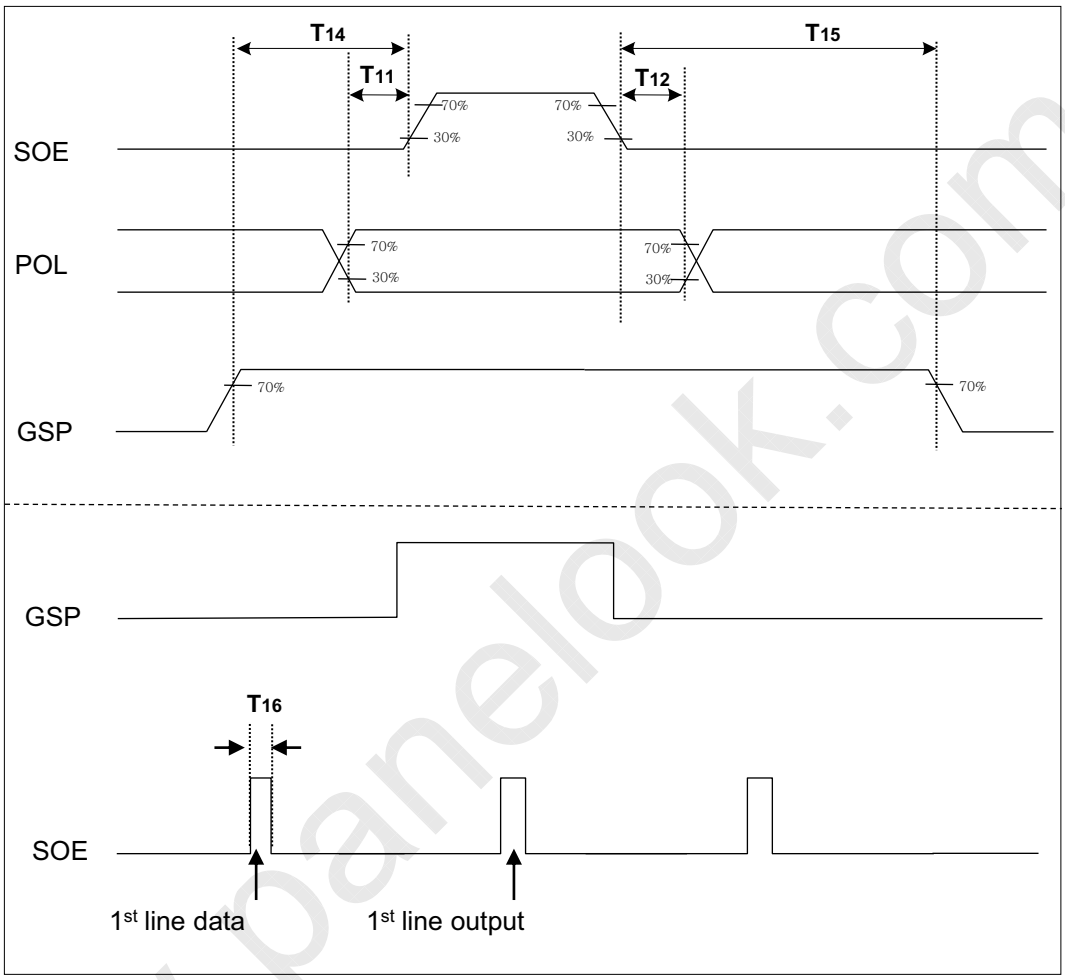

FIG 6. POL, GSP and SOE Timing Waveform

www.panelook.com

One step solution for LCD / PDP / OLED panel application: Datasheet, inventory and accessory! www.panelook.com

Global LCD Panel Exchange Center www.panelook.com 屏库:全球液晶屏交易中心

3-4. Data Mapping and Timing

Display data and control signal (RESET) are input to **LV0** to **LV5**.

3-4-1. Control signal input mode

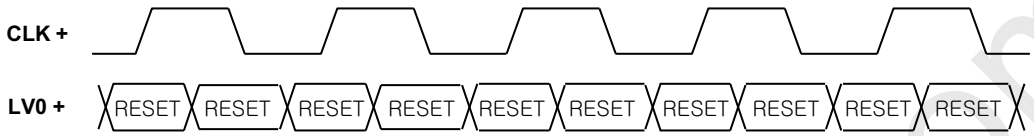

3-4-2. Display data input mode

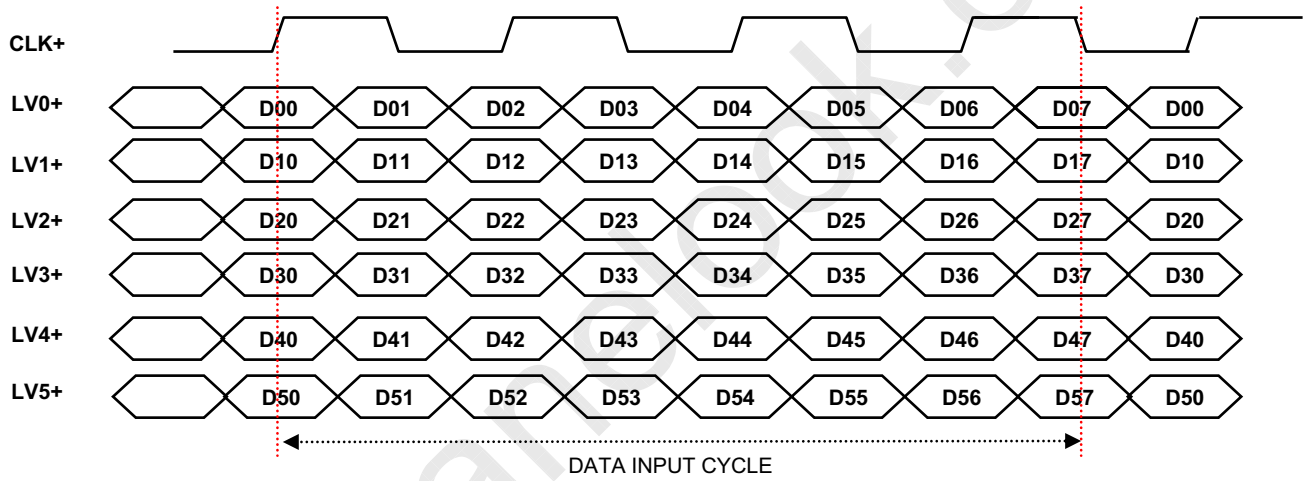

Fig. 7 Mini-LVDS Data

Note : 1. For data mapping, please refer to panel pixel structure Fig.8

One step solution for LCD / PDP / OLED panel application: Datasheet, inventory and accessory! www.panelook.com

Global LCD Panel Exchange Center www.panelook.com 屏库:全球液晶屏交易中心

3-5. Panel Pixel Structure

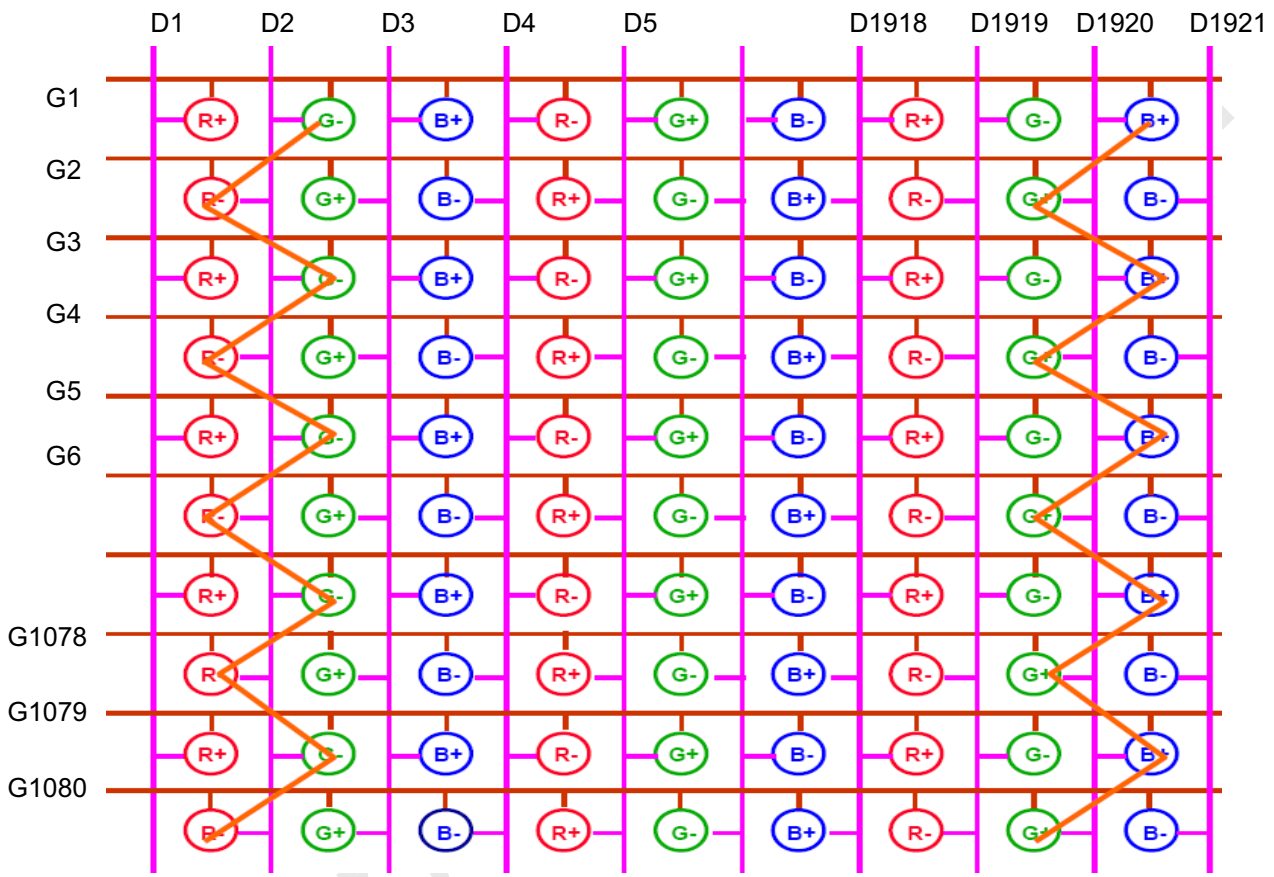

FIG. 8 Panel Pixel Structure

One step solution for LCD / PDP / OLED panel application: Datasheet, inventory and accessory! www.panelook.com

Global LCD Panel Exchange Center www.panelook.com 屏库:全球液晶屏交易中心

3-6. Power Sequence

3-6-1. LCD Driving circuit

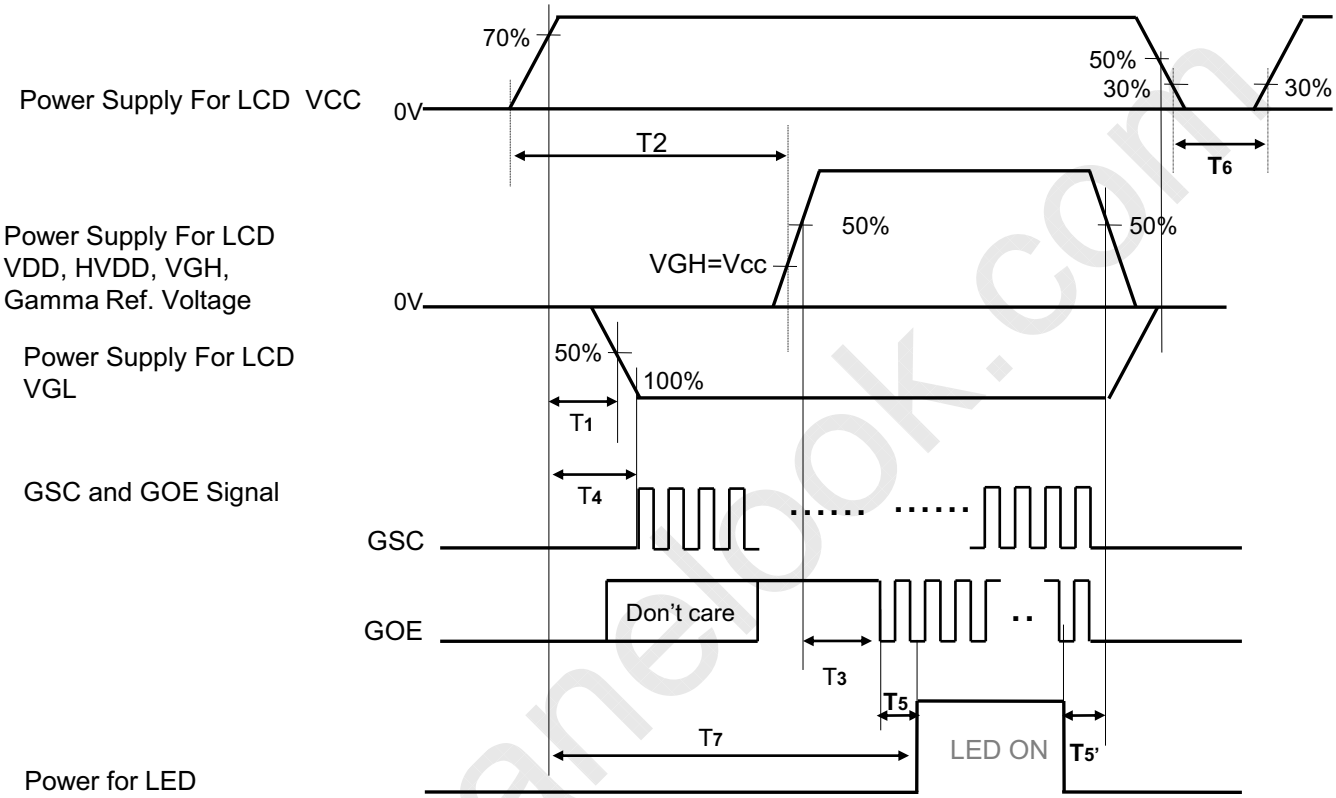

Table 5. POWER SEQUENCE

Ta= 25±2°C, fv=120Hz, Dclk=74.25MHz

Parameter	Value			Unit	Notes
	Min	Typ	Max		
T_1	0.5		-	ms	
T_2	0.01		-	ms	
T_3	10		-	ms	
T_4	0		T2	ms	
T_5 / T_5'	20		-	ms	
T_6	2		-	sec	
T_7	0.5		-	s	

Note : 1. Power sequence for Source D-IC must be kept. ※ Please refer to Appendix IV for more details
2. The Gate D-IC power on sequence must be VCC, VGL, logic input & VGH.
3. The 1st start of GSC is located between VGL and VGH.
4. Power off sequence order is reverse of power on sequence.

One step solution for LCD / PDP / OLED panel application: Datasheet, inventory and accessory! www.panelook.com

Global LCD Panel Exchange Center www.panelook.com 屏库:全球液晶屏交易中心

4. Optical Specification

Optical characteristics are determined after the unit has been 'ON' and stable in a dark environment at 25±2°C. The values are specified at distance 50cm from the LCD surface at a viewing angle of Φ and θ equal to 0 °. FIG. 1 shows additional information concerning the measurement equipment and method.

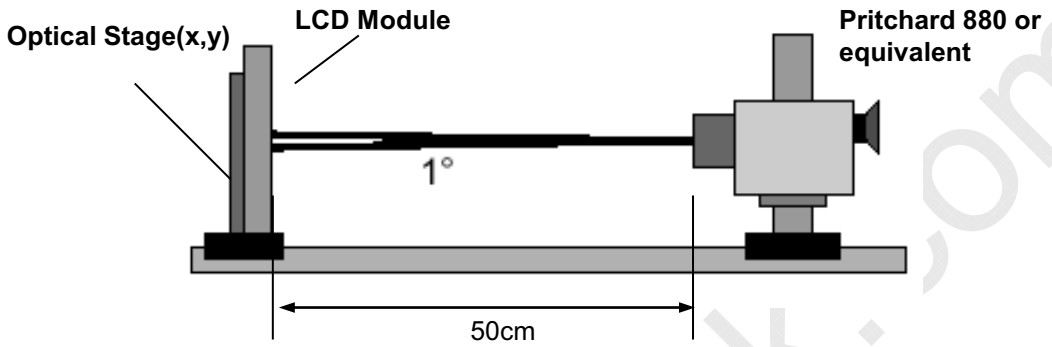

FIG. 1 Optical Characteristic Measurement Equipment and Method

Table 10. OPTICAL CHARACTERISTICS

Ta= 25±2°C, VDD,H_VDD,VGH,VGL=typ, fv=120Hz, Clk=297MHz , **EXTV**BR-B =100% Back Light : LGD B/L

Parameter		Symbol	Value Min	Value Typ	Value Max	Unit	Note
Contrast Ratio		CR	1100	1600	-		1
Surface Luminance, white		L_{WH}	320	400		cd/m²	2
Luminance Variation		δ_{WHITE} 5P	-	-	1.3		3
Response Time	Variation	G to G σ		5	8	ms	5
	Gray to Gray(BW)	G to G BW		8	12	ms	4
Color Coordinates [CIE1931]	RED	Rx	Typ -0.03	0.649	Typ +0.03		
		Ry		0.333			
	GREEN	Gx		0.308			
		Gy		0.607			
	BLUE	Bx		0.145			
		By		0.064			
	WHITE	Wx		0.279			
		Wy		0.292			
Color Temperature				10,000		K	
Color Gamut				72		%	
Viewing Angle (CR>10)							
	x axis, right(ϕ=0°)	θr	89	-	-	degree	6
	x axis, left (ϕ=180°)	θl	89	-	-		
	y axis, up (ϕ=90°)	θu	89	-	-		
	y axis, down (ϕ=270°)	θd	89	-	-		
Gray Scale				-			7

One step solution for LCD / PDP / OLED panel application: Datasheet, inventory and accessory! www.panelook.com

Global LCD Panel Exchange Center www.panelook.com 屏库:全球液晶屏交易中心

Notes : 1. Contrast Ratio (CR) is defined mathematically as :

$$CR = \frac{\text{Surface Luminance at all white pixels}}{\text{Surface Luminance at all black pixels}}$$

It is measured at center 1-point.

2. Surface luminance is determined after the unit has been 'ON' and 1Hour after lighting the backlight in a dark environment at 25±2°C. Surface luminance is the luminance value at center 1-point across the LCD surface 50cm from the surface with all pixels displaying white. For more information see the FIG. 2.

3. The variation in surface luminance , δ WHITE is defined as :

δ WHITE(5P) = Maximum(L_{on1},L_{on2}, L_{on3}, L_{on4}, L_{on5}) / Minimum(L_{on1},L_{on2}, L_{on3}, L_{on4}, L_{on5})

Where L_{on1} to L_{on5} are the luminance with all pixels displaying white at 5 locations . For more information, see the FIG. 2.

4. Response time is the time required for the display to transit from any gray to white (Rise Time, Tr_R) and from any gray to black (Decay time, Tr_D). For additional information see the FIG. 3.

※ G to G_{BW} Spec stands for average value of all measured points.
Photo Detector : RD-80S / Field : 2 °

5. G to G $_\sigma$ is Variation of Gray to Gray response time composing a picture

$$G \text{ to } G\ (\sigma) = \sqrt{\frac{\Sigma(Xi-u)^2}{N}}$$

Xi = Individual Data
u = Data average
N : The number of Data

6. Viewing angle is the angle at which the contrast ratio is greater than 10. The angles are determined for the horizontal or x axis and the vertical or y axis with respect to the z axis which is normal to the LCD module surface. For more information, see the FIG. 4.

7. Gray scale specification
Gamma Value is approximately 2.2. For more information, see the Table 11.

Table 11. GRAY SCALE SPECIFICATION

Gray Level	Luminance [%] (Typ.)
L0	0.0625
L15	0.27
L31	1.04
L47	2.49
L63	4.68
L79	7.66
L95	11.5
L111	16.1
L127	21.6
L143	28.1
L159	35.4
L175	43.7
L191	53.0
L207	63.2
L223	74.5
L239	86.7
L255	100

One step solution for LCD / PDP / OLED panel application: Datasheet, inventory and accessory! www.panelook.com

Global LCD Panel Exchange Center www.panelook.com 屏库:全球液晶屏交易中心

Measuring point for surface luminance & measuring point for luminance variation.

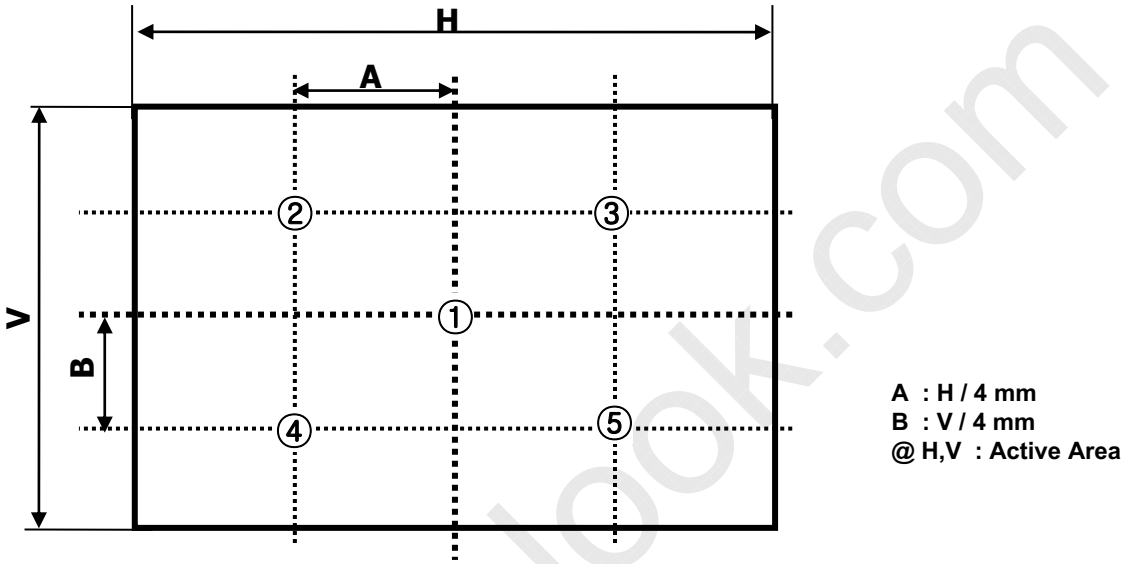

FIG. 2 5 Points for Luminance Measure

Response time is defined as the following figure and shall be measured by switching the input signal for "Gray(N)" and "Gray(M)".

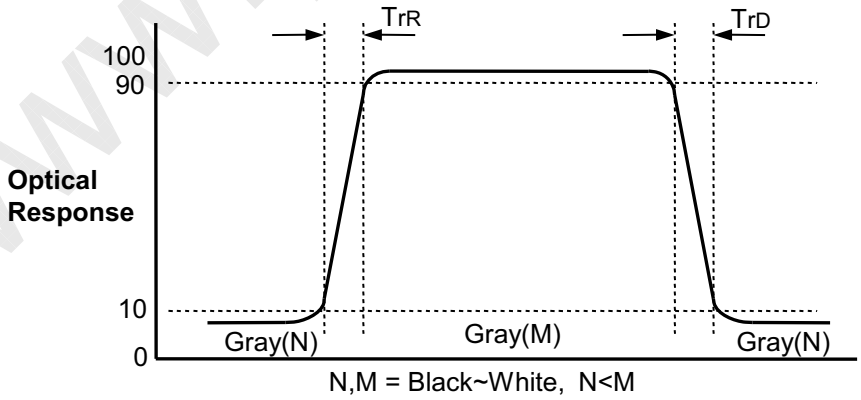

FIG. 3 Response Time

One step solution for LCD / PDP / OLED panel application: Datasheet, inventory and accessory! www.panelook.com

Global LCD Panel Exchange Center www.panelook.com 屏库:全球液晶屏交易中心

Dimension of viewing angle range

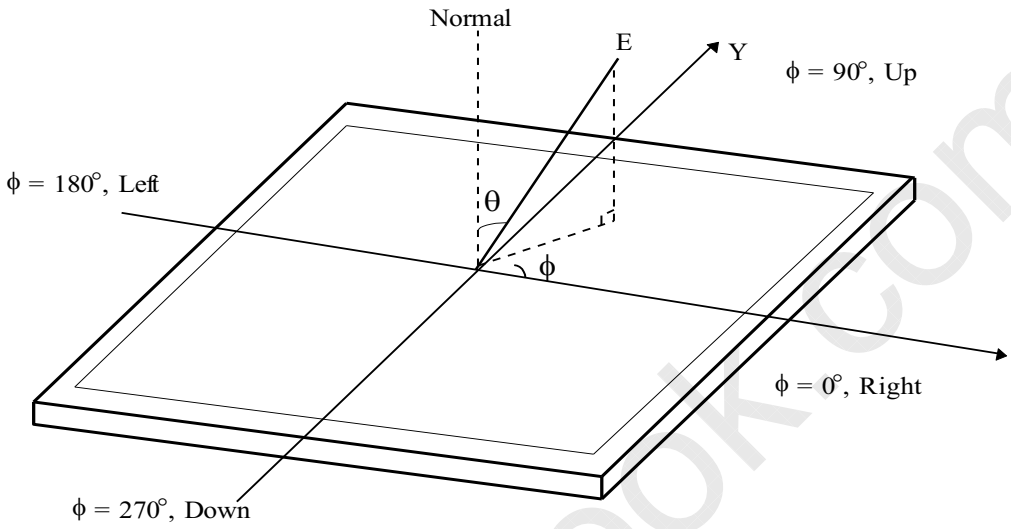

FIG. 4 Viewing Angle

FIG. 4 Viewing Angle

One step solution for LCD / PDP / OLED panel application: Datasheet, inventory and accessory! www.panelook.com

Global LCD Panel Exchange Center www.panelook.com 屏库:全球液晶屏交易中心

5. Mechanical Characteristics

Table 12 provides general mechanical characteristics.

Table 12. MECHANICAL CHARACTERISTICS

Item	Value	
Outline Dimension (Only Glass)	Horizontal	1255.60 mm
	Vertical	726.4 mm
	Thickness	10.80 mm
Active Display Area	Horizontal	1209.6 mm
	Vertical	680.4 mm
Weight	14.5kg(typ)	
Surface Treatment	Hard coating(3H) Anti-glare treatment of the front polarizer(10%)	

Note : Please refer to a mechanical drawing in terms of tolerance at the next page.

www.panelook.com

One step solution for LCD / PDP / OLED panel application: Datasheet, inventory and accessory! www.panelook.com

Global LCD Panel Exchange Center www.panelook.com 屏库:全球液晶屏交易中心

[FRONT VIEW]

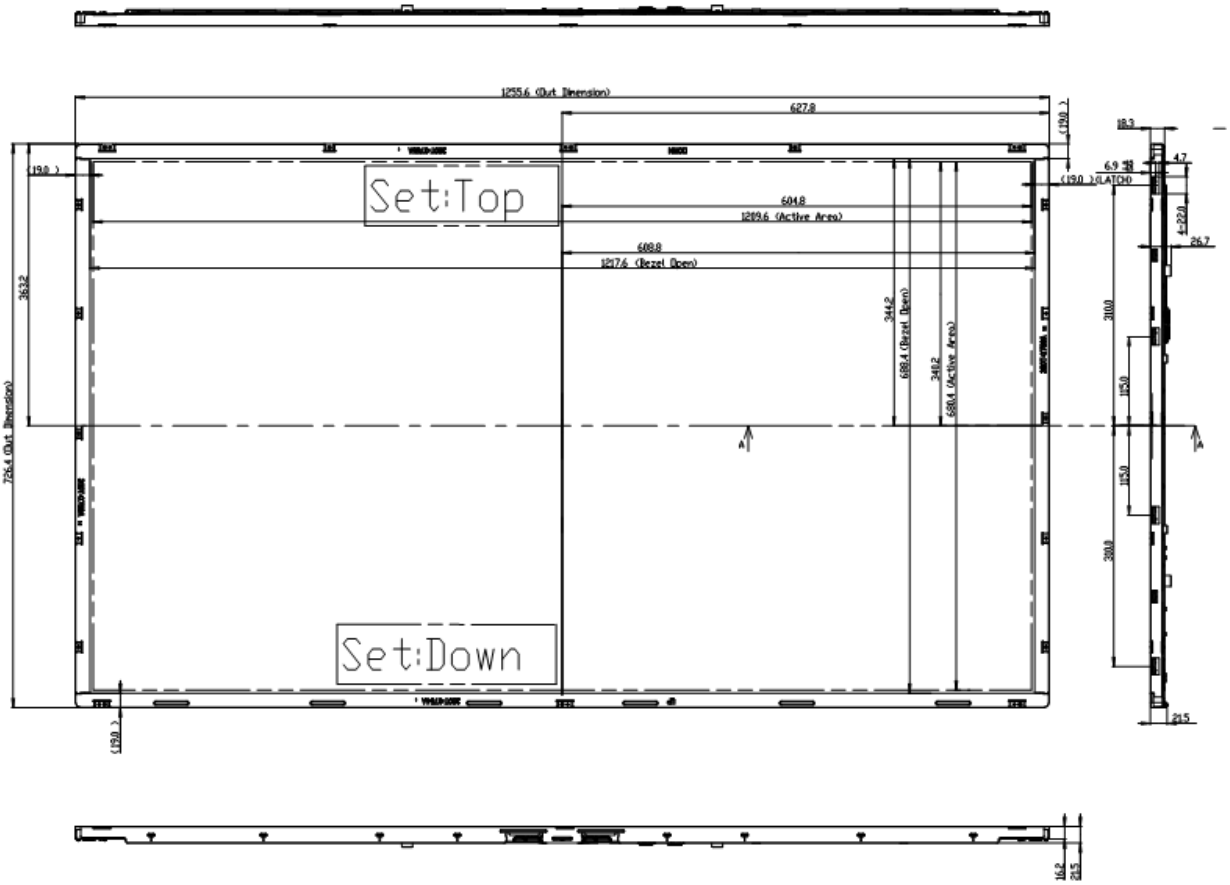

NOTES

1. Unspecified tolerances are to be ±0.0mm.
2. Tilt and partial disposition tolerance of display area are as following.
   ① X-Direction : |A-B| 1.5mm
   ② Y-Direction : |C-D| 1.5mm

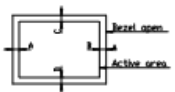

3. Torque : 3.5 ~ 5.0Kgf.cm
4. This part should be contains Eco-hazardous substances (Pb, Cd, Hg, Cr6+, PBB, PBDE, etc.) within standard level of LG Display. Details should be followed Green Procurement standard(D-00021). Especially, Part should be followed and controlled the following specifications.
   ① Eco-hazardous substances test report should be submitted when Part certification test and First Mass Production.
   ② Don't flow Eco-hazardous substances into resin by using scrap.
   ③ Don't flow Eco-hazardous substances into metal by using impurities or improper stuff.

One step solution for LCD / PDP / OLED panel application: Datasheet, inventory and accessory! www.panelook.com

Global LCD Panel Exchange Center www.panelook.com 屏库:全球液晶屏交易中心

[REAR VIEW]

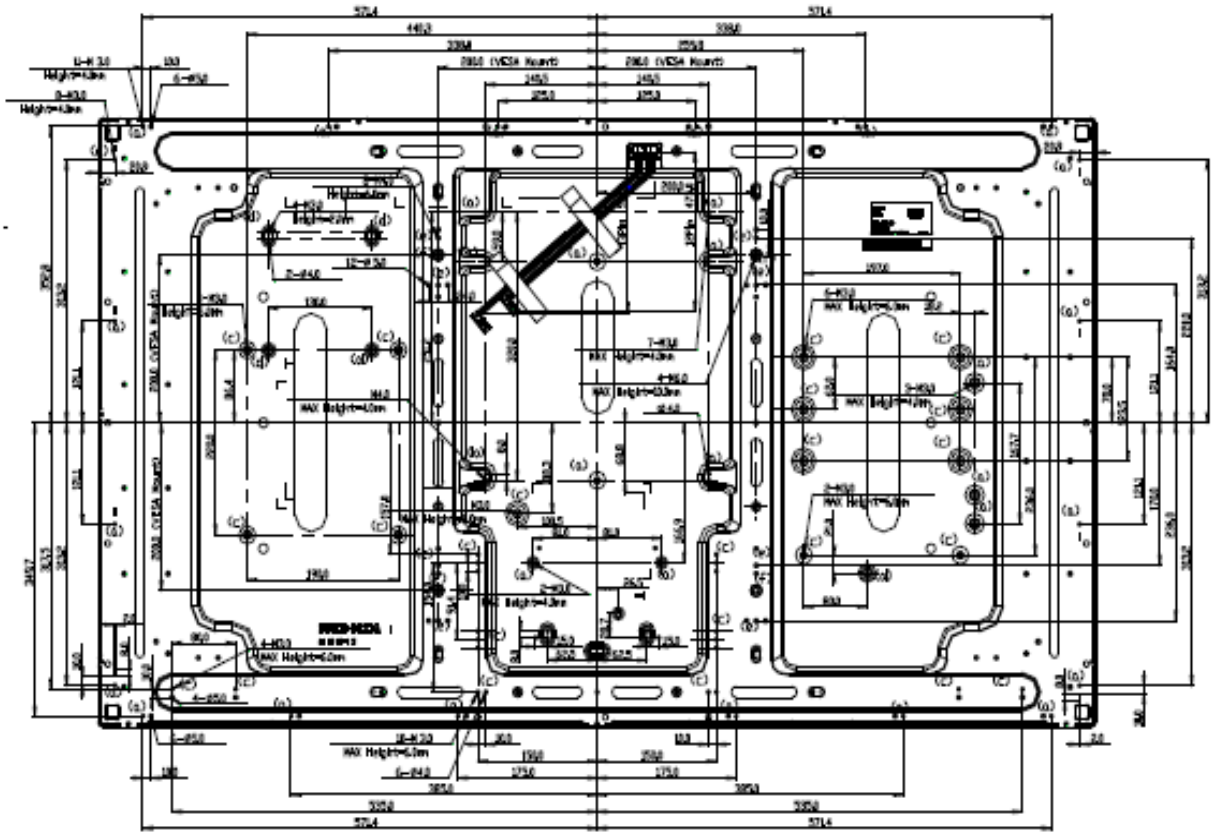

NO	TAP	Max Depth (mm)	Torque (Kgf.cm)	Notes
(a)	M3.0	4.0	Max8.0	
(b)	M4.0	4.0	Max10.0	
(c)	M3.0	6.0	Max8.0	
(d)	M3.0	2.0	Max8.0	
(e)	M4.0	6.0	Max10.0	
(f)	M6.0	10.0	Max15.0	

One step solution for LCD / PDP / OLED panel application: Datasheet, inventory and accessory! www.panelook.com

Global LCD Panel Exchange Center www.panelook.com 屏库:全球液晶屏交易中心

6. Reliability

Table 13. ENVIRONMENT TEST CONDITION

No.	Test Item	Condition
1	High temperature storage test	Ta= 60˚C 240h
2	Low temperature storage test	Ta= -20˚C 240h
3	High temperature operation test	Ta= 50˚C 50%RH 240h
4	Low temperature operation test	Ta= 0˚C 240h
5	Humidity condition Operation	Ta= 40 ˚C ,90%RH

Note : Before and after Reliability test, LCM should be operated with normal function.

www.panelook.com

One step solution for LCD / PDP / OLED panel application: Datasheet, inventory and accessory! www.panelook.com

Global LCD Panel Exchange Center www.panelook.com 屏库:全球液晶屏交易中心

7. International Standards

7-1. Environment

a) RoHS, Directive 2002/95/EC of the European Parliament and of the council of 27 January 2003

www.panelook.com

One step solution for LCD / PDP / OLED panel application: Datasheet, inventory and accessory! www.panelook.com

Global LCD Panel Exchange Center www.panelook.com 屏库:全球液晶屏交易中心

8. Precautions

Please pay attention to the followings when you use this TFT LCD module.

8-1. Mounting Precautions

(1) You must mount a module using specified mounting holes (Details refer to the drawings).
(2) You should consider the mounting structure so that uneven force (ex. Twisted stress) is not applied to the module. And the case on which a module is mounted should have sufficient strength so that external force is not transmitted directly to the module.
(3) Please attach the surface transparent protective plate to the surface in order to protect the polarizer. Transparent protective plate should have sufficient strength in order to the resist external force.
(4) You should adopt radiation structure to satisfy the temperature specification.
(5) Acetic acid type and chlorine type materials for the cover case are not desirable because the former generates corrosive gas of attacking the polarizer at high temperature and the latter causes circuit break by electro-chemical reaction.
(6) Do not touch, push or rub the exposed polarizers with glass, tweezers or anything harder than HB pencil lead. And please do not rub with dust clothes with chemical treatment.
Do not touch the surface of polarizer for bare hand or greasy cloth.(Some cosmetics are detrimental to the polarizer.)
(7) When the surface becomes dusty, please wipe gently with absorbent cotton or other soft materials like chamois soaks with petroleum benzine. Normal-hexane is recommended for cleaning the adhesives used to attach front / rear polarizers. Do not use acetone, toluene and alcohol because they cause chemical damage to the polarizer
(8) Wipe off saliva or water drops as soon as possible. Their long time contact with polarizer causes deformations and color fading.
(9) Do not open the case because inside circuits do not have sufficient strength.

8-2. Operating Precautions

(1) The spike noise causes the mis-operation of circuits. It should be lower than following voltage :
V=±200mV(Over and under shoot voltage)
(2) Response time depends on the temperature.(In lower temperature, it becomes longer.)
(3) Brightness depends on the temperature. (In lower temperature, it becomes lower.)
And in lower temperature, response time(required time that brightness is stable after turned on) becomes longer
(4) Be careful for condensation at sudden temperature change.Condensation makes damage to polarizer or electrical contacted parts. And after fading condensation, smear or spot will occur.
(5) When fixed patterns are displayed for a long time, remnant image is likely to occur.
(6) Module has high frequency circuits. Sufficient suppression to the electromagnetic interference shall be done by system manufacturers. Grounding and shielding methods may be important to minimized the interference.
(7) Please do not give any mechanical and/or acoustical impact to LCM. Otherwise, LCM can't be operated its full characteristics perfectly.
(8) A screw which is fastened up the steels should be a machine screw.
(if not, it can causes conductive particles and deal LCM a fatal blow)
(9) Please do not set LCD on its edge.
(10) The conductive material and signal cables are kept away from LED driver inductor to prevent abnormal display, sound noise and temperature rising.

One step solution for LCD / PDP / OLED panel application: Datasheet, inventory and accessory! www.panelook.com

Global LCD Panel Exchange Center www.panelook.com 屏库:全球液晶屏交易中心

8-3. Electrostatic Discharge Control

Since a module is composed of electronic circuits, it is not strong to electrostatic discharge. Make certain that treatment persons are connected to ground through wrist band etc. And don't touch interface pin directly.

8-4. Precautions for Strong Light Exposure

Strong light exposure causes degradation of polarizer and color filter.

8-5. Storage

When storing modules as spares for a long time, the following precautions are necessary.

(1) Store them in a dark place. Do not expose the module to sunlight or fluorescent light. Keep the temperature between 5°C and 35°C at normal humidity.
(2) The polarizer surface should not come in contact with any other object.
It is recommended that they be stored in the container in which they were shipped.
(3) Storage condition is guaranteed under packing conditions.
(4) The phase transition of Liquid Crystal in the condition of the low or high storage temperature will be recovered when the LCD module returns to the normal condition

8-6. Handling Precautions for Protection Film

(1) The protection film is attached to the bezel with a small masking tape.
When the protection film is peeled off, static electricity is generated between the film and polarizer.
This should be peeled off slowly and carefully by people who are electrically grounded and with well ion-blown equipment or in such a condition, etc.
(2) When the module with protection film attached is stored for a long time, sometimes there remains a very small amount of glue still on the bezel after the protection film is peeled off.
(3) You can remove the glue easily. When the glue remains on the bezel surface or its vestige is recognized, please wipe them off with absorbent cotton waste or other soft material like chamois soaked with normal-hexane.

www.panelook.com

One step solution for LCD / PDP / OLED panel application: Datasheet, inventory and accessory! www.panelook.com

Global LCD Panel Exchange Center www.panelook.com 屏库:全球液晶屏交易中心

APPENDIX- II-1

■ LCM Label

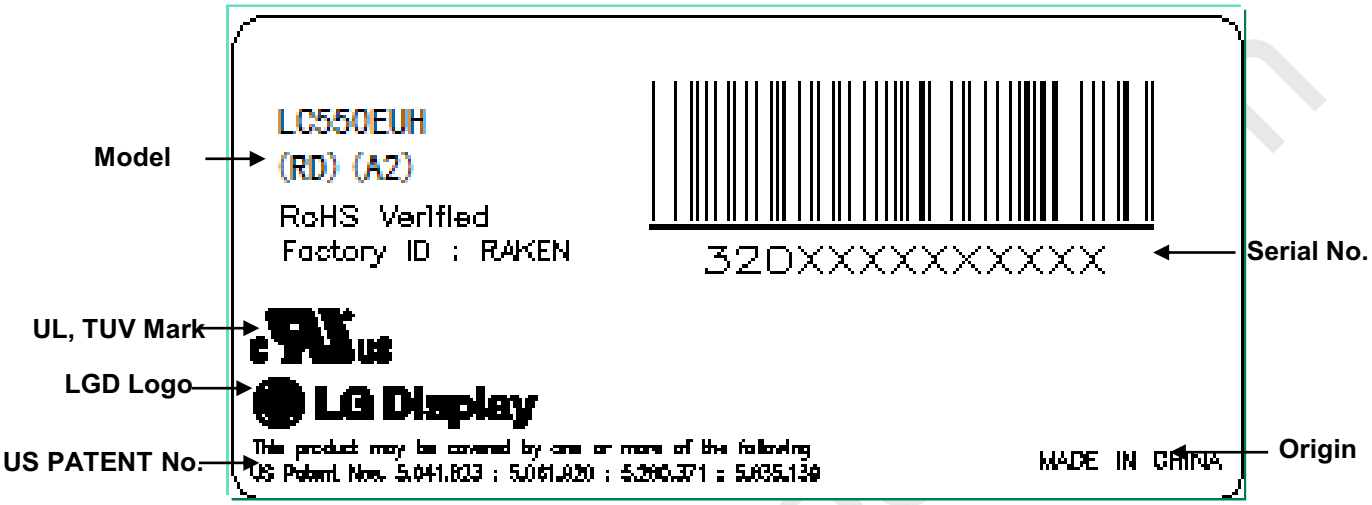

One step solution for LCD / PDP / OLED panel application: Datasheet, inventory and accessory! www.panelook.com

Global LCD Panel Exchange Center www.panelook.com 屏库:全球液晶屏交易中心

APPENDIX- II-1

■ Required signal assignment for Flat Link (Thine : THC63LVD103) Transmitter(Pin7= **"L" or "NC"**)

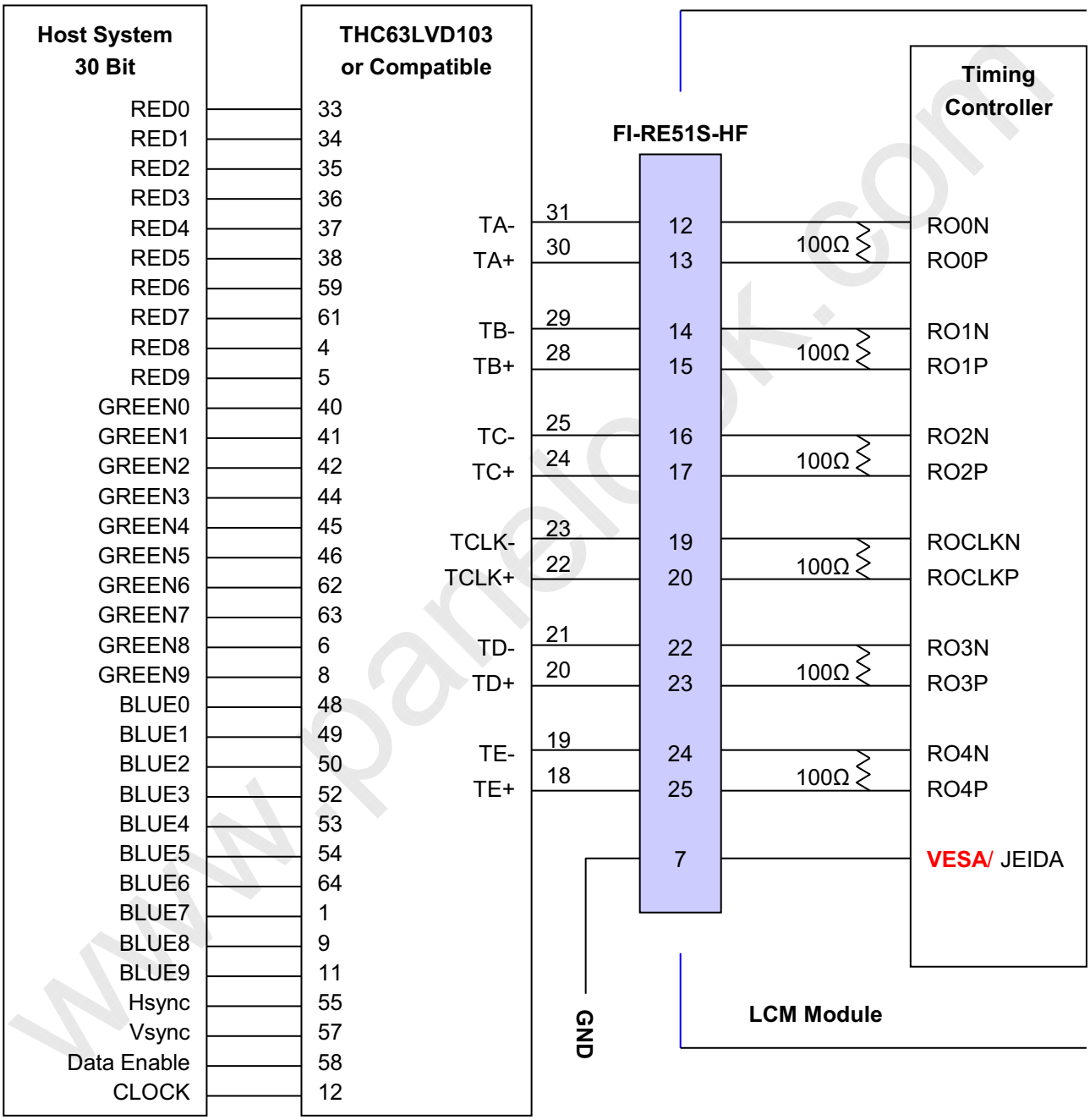

Note: 1. The LCD module uses a 100 Ohm[Ω] resistor between positive and negative lines of each receiver input.
2. Refer to LVDS Transmitter Data Sheet for detail descriptions. (THC63LVD103 or Compatible)
3. '9' means MSB and '0' means LSB at R,G,B pixel data.

One step solution for LCD / PDP / OLED panel application: Datasheet, inventory and accessory! www.panelook.com

Global LCD Panel Exchange Center www.panelook.com 屏库:全球液晶屏交易中心

APPENDIX- II-2

■ Required signal assignment for Flat Link (Thine : THC63LVD103) Transmitter(Pin7= **"H"**)

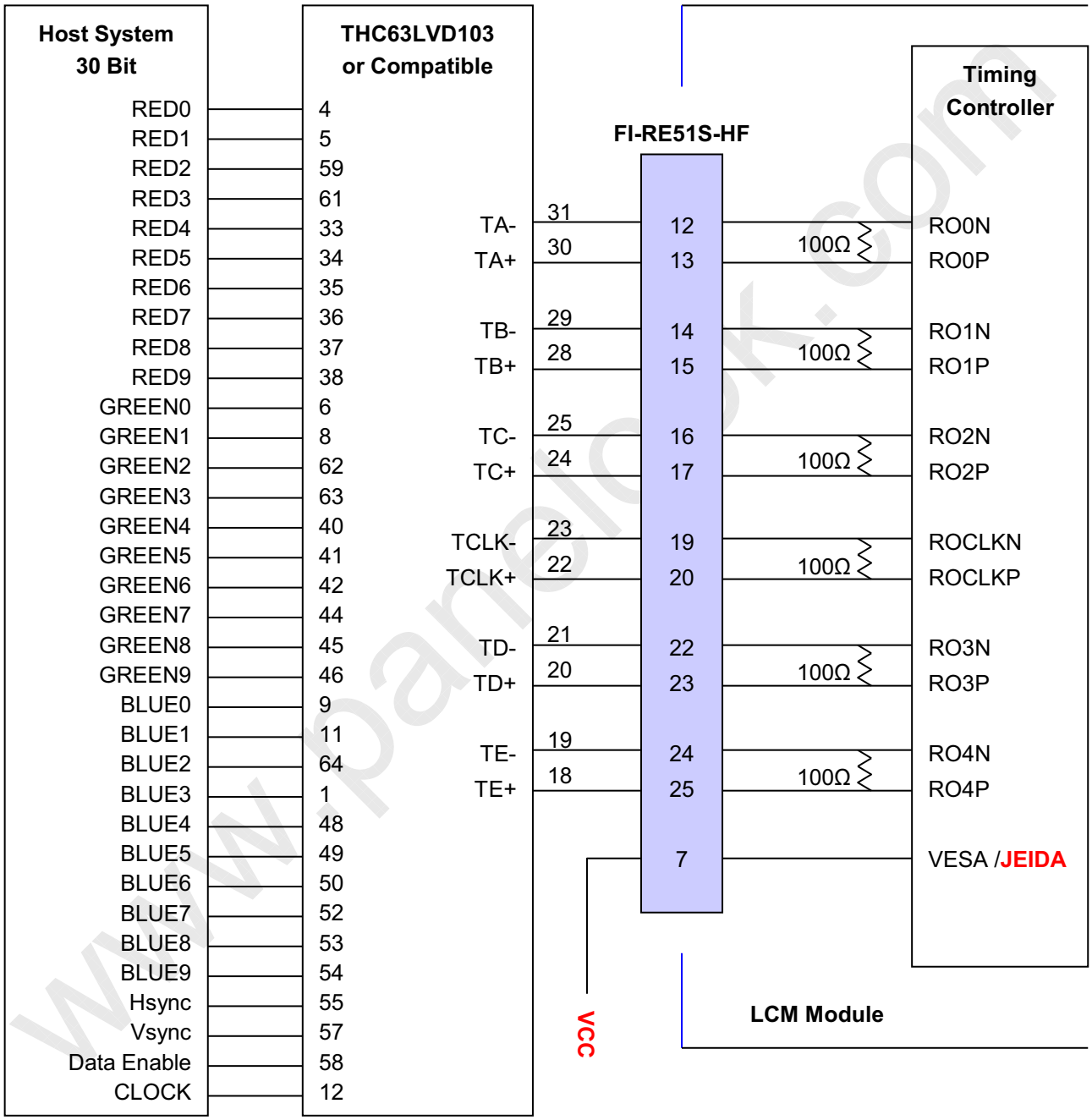

Note :1. The LCD module uses a 100 Ohm[Ω] resistor between positive and negative lines of each receiver input.

2. Refer to LVDS Transmitter Data Sheet for detail descriptions. (THC63LVD103 or Compatible)

3. '9' means MSB and '0' means LSB at R,G,B pixel data.

One step solution for LCD / PDP / OLED panel application: Datasheet, inventory and accessory! www.panelook.com

Global LCD Panel Exchange Center www.panelook.com 屏库:全球液晶屏交易中心

APPENDIX- IV

LVDS Data-Mapping info. (8bit)

■ LVDS Select : "H" Data-Mapping (JEIDA format)

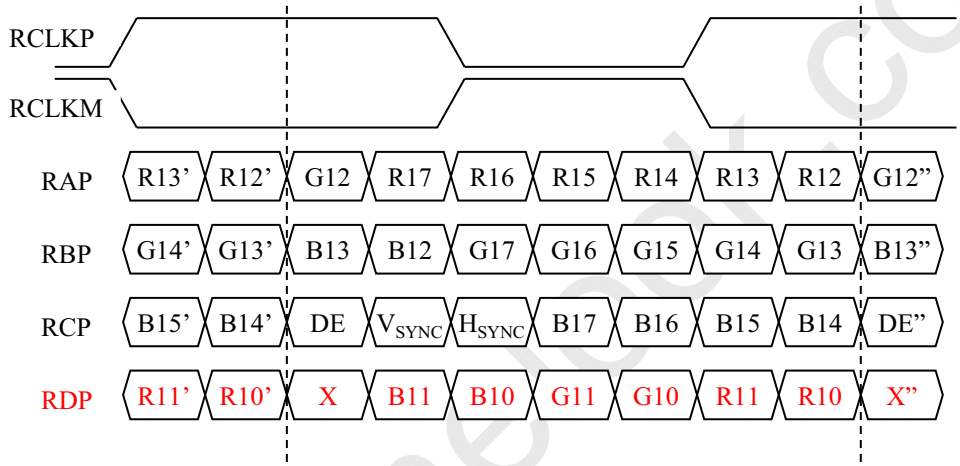

■ LVDS Select : "L" Data-Mapping (VESA format)

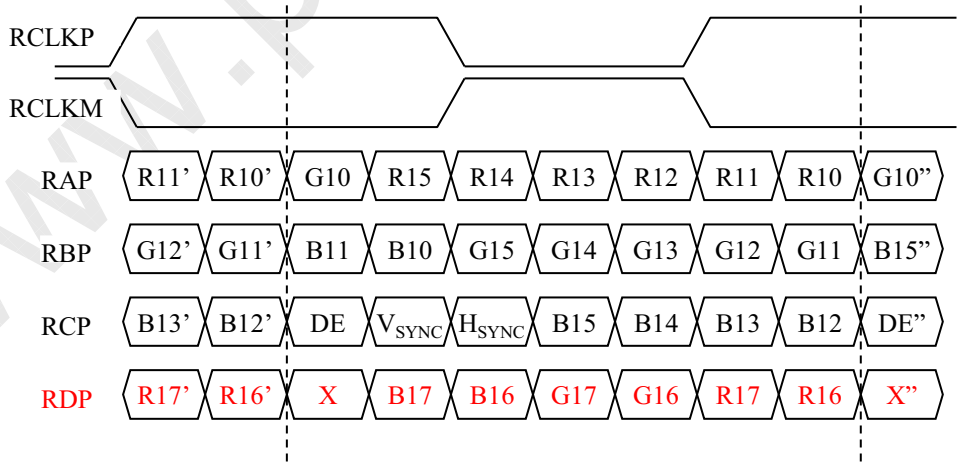

One step solution for LCD / PDP / OLED panel application: Datasheet, inventory and accessory! www.panelook.com

Global LCD Panel Exchange Center www.panelook.com 屏库:全球液晶屏交易中心

APPENDIX- V

Option Pin Circuit Block Diagram

Circuit Block Diagram of LVDS Format Selection pin

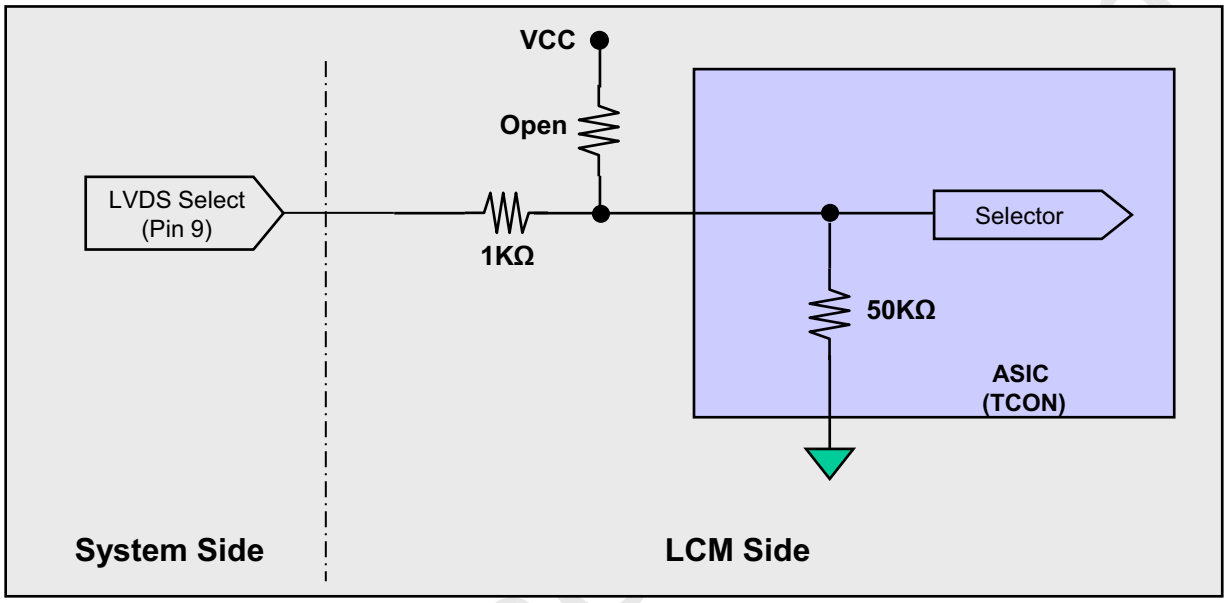

One step solution for LCD / PDP / OLED panel application: Datasheet, inventory and accessory! www.panelook.com

Global LCD Panel Exchange Center www.panelook.com 屏库:全球液晶屏交易中心

APPENDIX- IV

■ Source D-IC Power Sequence

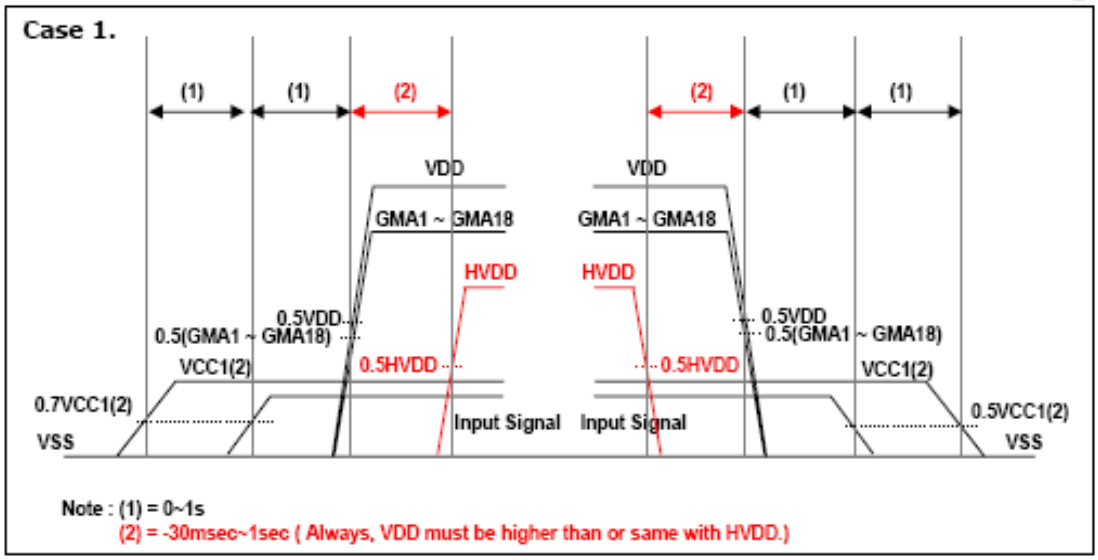

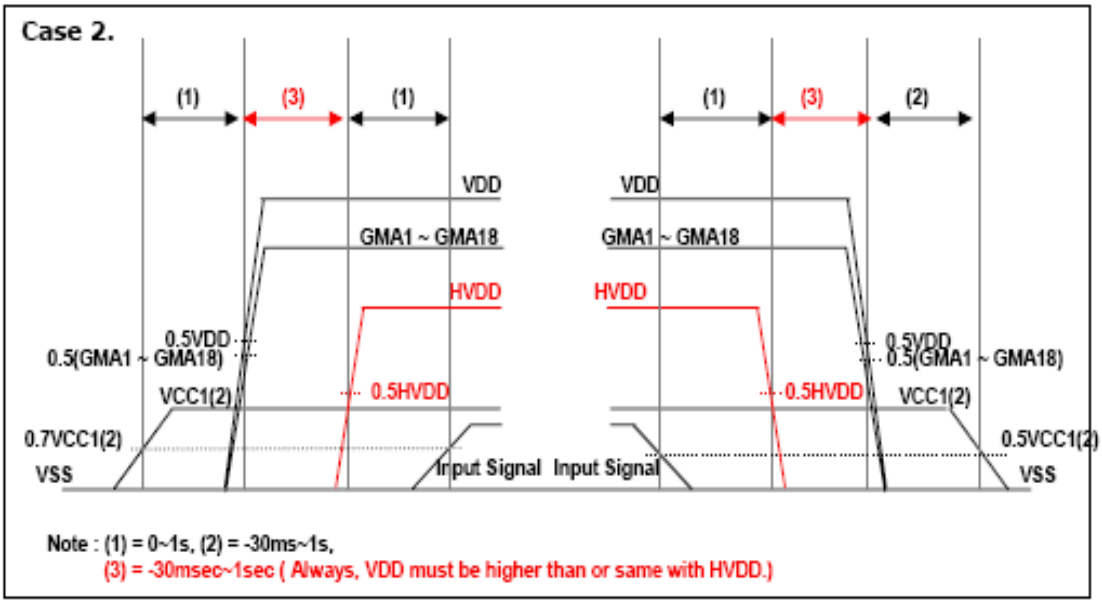

- Input Signal : SOE,POL,GSP,H_CONV,OPT_N, mini-LVDS

One step solution for LCD / PDP / OLED panel application: Datasheet, inventory and accessory! www.panelook.com